Self-Propelled Articulating Booms

Z™-33/18

Specifications

Models	Z-33/18	
Measurements	**Metric**	**US**
Working height maximum*	12 m	39 ft 4 in
Platform height maximum	10 m	32 ft 10 in
Horizontal reach maximum	5.57 m	18 ft 3 in
Up and over clearance maximum	4.28 m	14 ft 1 in
A Platform length	0.76 m	2 ft 6 in
B Platform width	1.17 m	3 ft 10 in
C Height - stowed	1.98 m	6 ft 6 in
D Length - stowed	4.17 m	13 ft 8 in
E Width	1.50 m	4 ft 11 in
F Wheelbase	1.90 m	6 ft 3 in
G Ground clearance - center	15.2 cm	6.0 in
Productivity		
Lift capacity	200 kg	440 lbs
Turntable rotation	400° non-continuous	
Turntable tailswing at counterweight	zero	zero
Turntable tailswing - riser up	0.15 m	5.2 in
Turntable tailswing - riser down	1.16 m	3 ft 10 in
Drive speed - stowed	6 km/h	3.7 mph
Drive speed - raised retracted**	0.75 km/h	0.47 mph
Drive speed - raised extended**	0.23 km/h	0.14 mph
Gradeability - stowed***	30%	30%
Turning radius - inside	1.9 m	6 ft 3 in
Controls	24 V DC proportional	
Tyres	56x23x44 cm	22x9x17 in
Power		
Power source	48 V DC (eight 6 V X 8 batteries 315 Ah capacity)	
Drive system	48 V 3 phase AC	
Auxiliary power unit	24 V DC	24 V DC
Hydraulic tank capacity	20.8 L	6 gal
Sound & Vibration Levels		
Sound pressure level (ground)	<70 dBA	<70 dBA
Sound pressure level (platform)	<70 dBA	<70 dBA
Vibration	<2.5 m/s²	<8 ft 2 in/s²
Weight**		
	3,640 kg	8,025 lbs
Standards Compliance	EU Directives: 2006/42/EC - Machinery (harmonized standard EN280:2013+2013); 2004/108/EC (EMC); 2006/95/EC (LVD)	

Range Of Motion Z-33/18

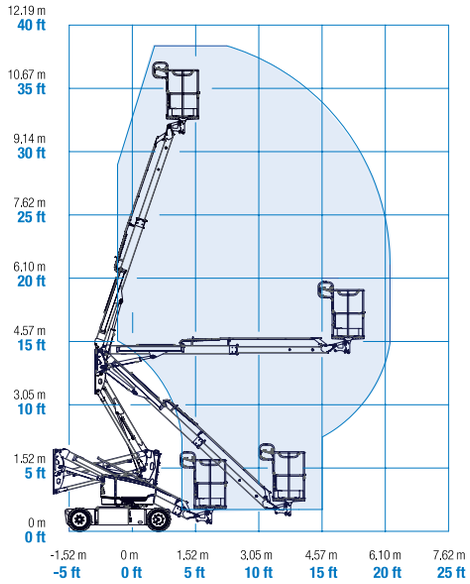

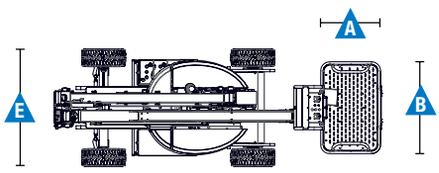

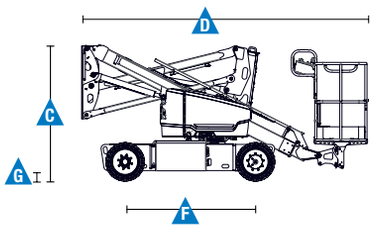

* The metric equivalent of working height adds 2 m to platform height. U.S. adds 6 ft to platform height.
** In lift mode *(platform raised), the machine is designed to operated on firm, level surfaces only.
*** Gradeability applies to driving on slopes. See operator's manual for details regarding slope ratings.
**** Weight will vary depending on options and/or country standards.

Self-Propelled Articulating Booms

Z™-33/18

Features

Standard Features

Measurements

Z-33/18

- 12 m (39 ft 4 in) working height
- 5.57 m (18 ft 3 in) horizontal reach
- 4.28 m (14 ft 1 in) up and over clearance
- Up to 200 kg (440 lbs) lift capacity

Productivity

- 1.50 m (4 ft 11 in) width
- 1.9 m (6 ft 3 in) inside turning radius
- Self-levelling platform
- Fast Mast™ System
- Proportional joystick controls
- Telematics-Ready Connector
- Thumb rocker steer
- Drive enable
- AC power cord to platform
- Horn
- Hour meter
- Tilt alarm
- Descent & travel alarms
- Flashing beacon
- 400° non-continuous turntable rotation
- Variable speed high efficiency hydraulic power unit
- AC electric drive system
- Traction control
- On board easy to understand diagnostics
- Certified load sensor
- Electric brake release
- Drive at full height
- Entry toe boards

Power

- 48 V DC deep cycle battery pack
- 24 V DC auxiliary power
- Universal 30A battery smart charger
- Battery charge indicator
- Low battery voltage interrupt
- 48 V solid state battery charger

Easily Configured To Meet Your Needs

Platform

- Steel 1.17 m (3 ft 10 in)

Power

- 48 V DC (eight 6 V 350 Ah batteries)

Drive

- 2 x 4 Electric AC

Tyres

- Solid rubber non-marking
- Multi-purpose tyres [1] (not interchangeable with standard tyres)

Options & Accessories

Productivity

- Air line to platform [1]
- Power to platform (incl.plug,socket and ground fault interrupt leakage on request)
- Work lights package (2 on chassis,2 on platform)
- Track & Trace [2] (GPS unit providing machine location & operating information)
- Lockable platform control box cover

[1] Factory-fit option only
[2] Includes a first 2 years subscription

03/16 Part No. B109409UK

Jøma Lift Teknik A/S
Nordager 24, DK 6000 Kolding, Denmark. Tel: +45 75864333 Email: info@genielift.dk www.Genielift.dk

Worldwide Manufacturing And Distribution

Australia · Brazil · Caribbean · Central America · China · France · Germany · Italy · Japan · Korea · Mexico · Russia · Southeast Asia · Spain · Sweden · United Arab Emirates · United Kingdom · United States

Product specifications and prices are subject to change without notice or obligation. The photographs and/or drawings in this document are for illustrative purposes only. Refer to the appropriate Operator's Manual for instructions on the proper use of this equipment. Failure to follow the appropriate Operator's Manual when using our equipment or to otherwise act irresponsibly may result in serious injury or death. The only warranty applicable to our equipment is the standard written warranty applicable to the particular product and sale and we make no other warranty, express or implied. Products and services listed maybe trademarks, service marks or trade names of Terex Corporation and/or their subsidiaries in the USA and many other countries. Genie is a registered trademark of Terex South Dakota, Inc. © 2016 Terex Corporation.